Martens
Member of GHM GROUP

English

Operating manual

Safety temperature limiter
STL50

Approved in accordance with:
DIN EN 14597 (replacing DIN 3440)
SIL 2

Company / brands of GHM

Members of GHM GROUP
GREISINGER
HONSBERG
Martens
IMTRON
DeltaOHM

www.ghm-messtechnik.de

Save for later reference.

Content

1 Intended use (areas of application)

Refer to the chapter 'Product description' for detailed specifications for the area of application.

The operational safety of the device is only assured when used as intended in accordance with the specifications in the operating manual.
Intervention beyond the actions described in the operating manual may only be carried out by personnel authorised by the manufacturer for safety and warranty reasons. Conversions or modifications made on one's own authority are expressly prohibited.

Application-specific dangers can emanate from this device when used improperly or not as intended.
The device is intended for operation in safety-relevant systems up to SIL2.
The device is not suitable for use in explosion-prone areas.

General safety instructions, use
This operating manual must be kept in a location such that qualified personnel can refer to it at all times.
Any processes described in this operating manual may only be carried out by trained, qualified personnel who are authorised by the owner and wearing protective clothing. All rights reserved.

1.1 Safety signs and symbols

Warning notices are identified in this document as described below:

DANGER

Warning! This symbol warns of imminent danger which can result in death, severe bodily injury, or severe property damage in case of non-observance.

Attention! This symbol warns of potential dangers or harmful situations which can cause damage to the device or to the environment in case of non-observance.

Note! This symbol indicates processes which can have a direct influence on operation or can trigger an unforeseen reaction in case of non-observance.

Warning! of an area in which explosive atmospheres can form. This only applies to devices with ATEX approval.

1.2 Safety instructions

Read the product description before commissioning the device. Ensure that there are no limitations for use of the product for the relevant applications.

DANGER

The owner is responsible for ensuring the fault-free operation of the device. The owner is obligated to ensure compliance and to observe the required work and safety measures of the current applicable regulations for the entire duration of use.

1.3 Product liability and warranty

Exclusion of liability:
The contents of the operating manual have been checked to ensure conformity with the described device. However, deviations cannot be entirely ruled out. Therefore, we cannot assume any guarantee for complete conformity. The specifications in this document are checked regularly and any necessary corrections are incorporated into subsequent versions. This document is subject to technical changes. In addition, all claims are based on the valid 'Standard Terms for the Supply of Products and Services of the Electrical Industry'.

GHM Messtechnik cannot inspect or repair any devices without the required form having been filled in completely (see chapter 6 Return to manufacturer, page 24).

1.4 Standards and directives

Conformity with Directive 2014/30/EU

CE conformity	EN 61326-1: 2013 EN 61326-2-2: 2013

1.5 Approvals

EN 14597:2012	Temperature control devices and temperature limiters for heat generating systems
EN 61508:2011 SIL2	Functional safety of electrical/electronic/programmable electronic safety-related systems

2 Product description

The STL50 safety temperature limiter is used wherever thermal processes must be monitored and the system must be switched to a safe operating state in case of a fault. If the permissible temperature limit value is reached or an error occurs in the monitoring device (probe break, probe short-circuit, failure of a component in the device, error in the software, failure or impermissible value of the supply voltage, etc.) within the permissible temperature range, the STL50 switches off immediately. The alarm contact is confirmed, the front-side ALARM LED and the background lighting of the display illuminate, and the cause of error is shown on the display in plain text.
A 24 V DC signal for an external alarm is also connected to terminals 17-18.

2.1 Scope of delivery

- Safety temperature limiter STL50 with packaging
- This operating manual

2.2 Features

- Can be used as

STB	Safety temperature limiter
ASTB	Exhaust gas safety temperature limiter
STW	Safety temperature monitor

- Certified according to EN 61508 SIL2
- Pt100 input, 3-wire connection or double thermocouple J, K, N and S
- Programmable temperature limit value and switching hysteresis
- Basic accuracy <0.5 %, ±2 digit
- Reaction time ≤ 0,5 s
- Alarm output 1 relay, SPDT
- Pre-alarm output 1 relay, SPDT
- Analog output 0/4 ... 20mA, 0/2 ... 10V
- Memory function for error message
- Operator lockout (password-protected)
- Case for TS35 DIN rail mounting

2.3 Brief information

Programming	The device is programmed with the buttons on the front side in combination with the graphic display.
Operating modes	The device can be used as:
STB →	Maximum or minimum monitoring with catch Manual reset after fault elimination by pressing the button on the front side or an externally connected button
ASTB →	like before, but with exhaust temperature monitoring
STW →	Maximum or minimum monitoring without catch Automatic reset after return to the permissible range
Switching hysteresis	always acts towards a safe range.
Error buffer	The last error is stored as plain text and can be viewed and deleted on the working level.

DANGER

Temperature probe:
With use of the device in accordance with DIN EN 14597, temperature sensors that are approved in accordance with DIN EN 14597 must be used!

2.4 Dimensions

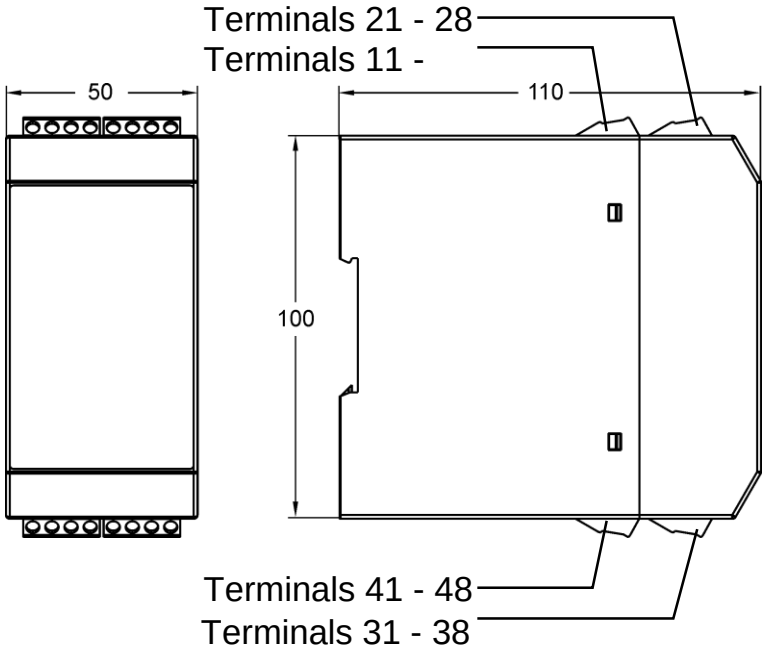

2.5 Connection diagrams

STL50-1-1R-X-00

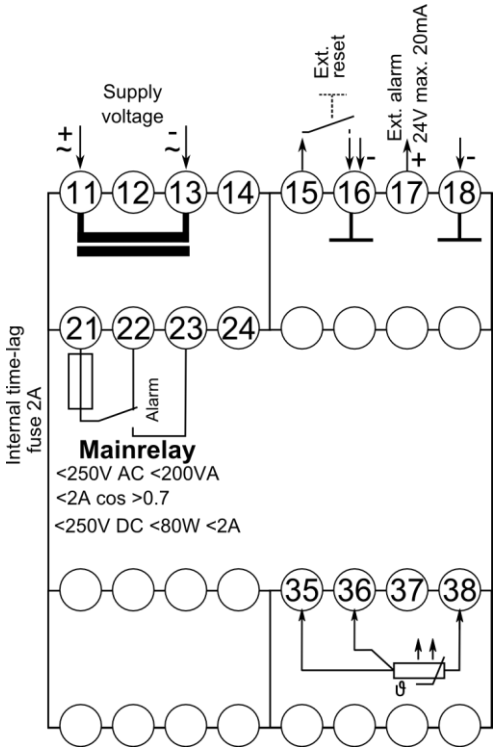

STL50-5-1R-X-00

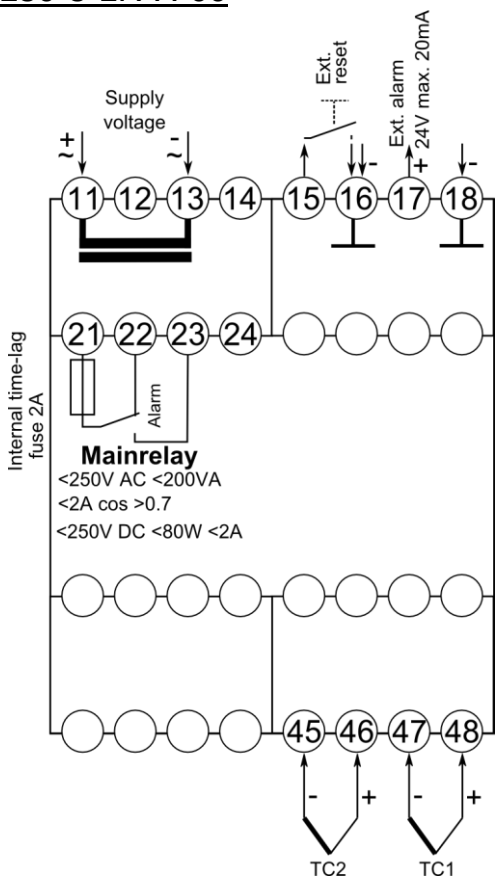

STL50-1-2RAO-X-00

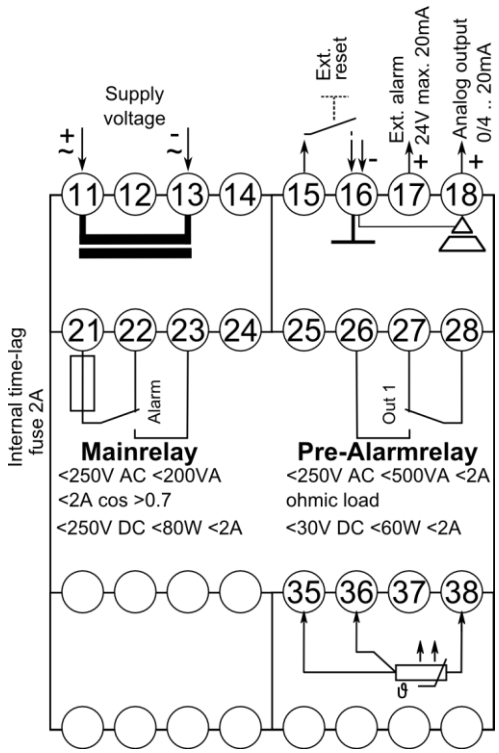

STL50-5-2RAO-X-00

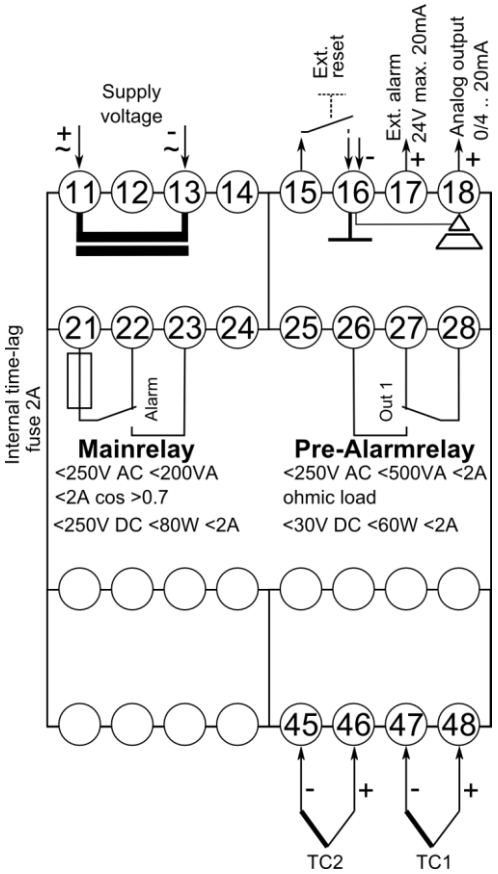

2.6 Electrical installation

DANGER

The device may only be installed by an electrician. Compliance with the national and international regulations for installation of electrical and electronic systems applicable in the respective country of use is mandatory.

Pt100 input:

The resistance of 4 Ω per line must not be exceeded.
The corresponding line length for copper cable is specified in the table.
The values must be calculated for other line materials and cross-sections.

Maximum line length for copper lines

Line cross-section	Maximum line length
0.14 mm²	32 m
0.25 mm²	58 m
0.5 mm²	116 m
0.75 mm²	174 m
1 mm²	232 m
1.5 mm²	348 m

3 Controls and functional description

3.1 Operating and display elements

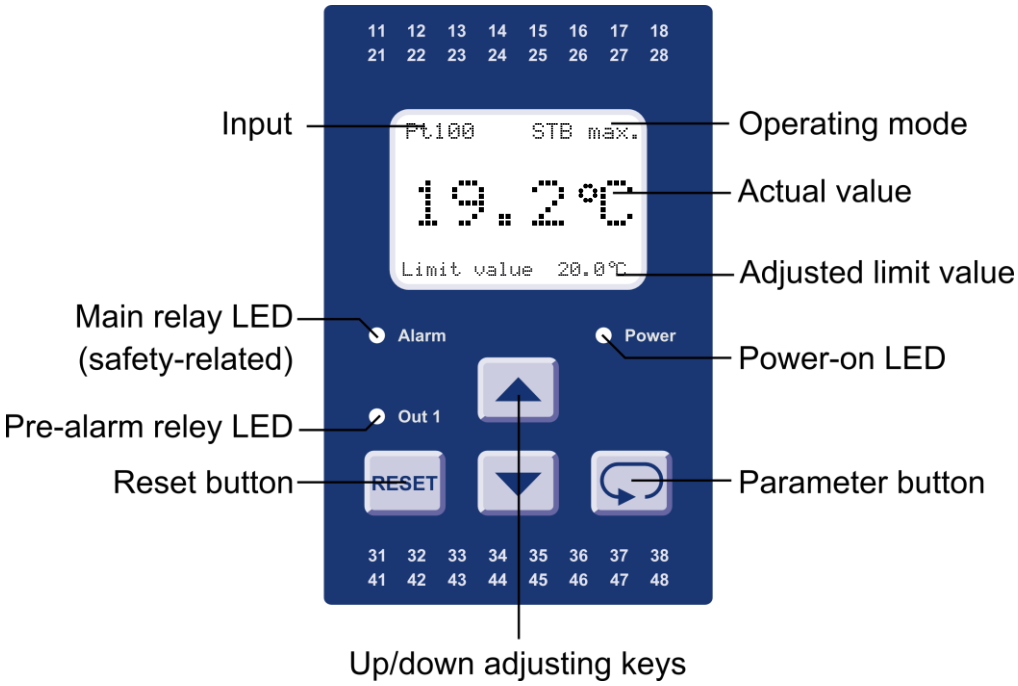

3.2 Operation

The device is operated on 2 levels.

The desired parameter is opened with the button.
Selection within a parameter or adjustment of a value takes place with the and buttons.

Button combinations (press buttons simultaneously):

+ 1 parameter back

+ parameter is set to “0” or minimum value

The device initialises after the supply voltage is connected. The device type and software version appear in the display. After the device is finished initialising, it enters the operating level and the current temperature and all safety-related settings are displayed. The peak value buffer is displayed by briefly pressing the button. The configuration level is displayed by pressing and holding the button for 2 seconds. All parameters determining the properties of the device are programmed here. A password must be entered in order to enter the safety area of the configuration level. If an incorrect password is entered, an error message appears in the display. The device switches back to the operating level after this message or if no password is entered. After an incorrect password has been entered three times, the device enters a safety timeout for 60 minutes. The progress of this safety timeout is shown in the display. The safety area is accessible with entry of the correct password. Settings can be made here, which must be protected from unauthorised change. After the last menu item or if no button is pressed for more than 2 minutes, the devices switches back to operating level automatically and the current measurement is shown in the display. The configuration level can be exited at any times by pressing the button for 2 seconds.

Error messages
If errors occur, the messages are shown in clear text on the display. This simplifies troubleshooting.

Note for commissioning!
The device has standard preconfigured factory settings. Therefore, it must be adapted to the specific application.

Service
Service of the device is only possible in the factory. Please refer to chapter 6 Return to manufacturer on page 24.

3.3 Operating level

Note: Only the resetting of the peak value buffer is possible on the working level

Display **Description**

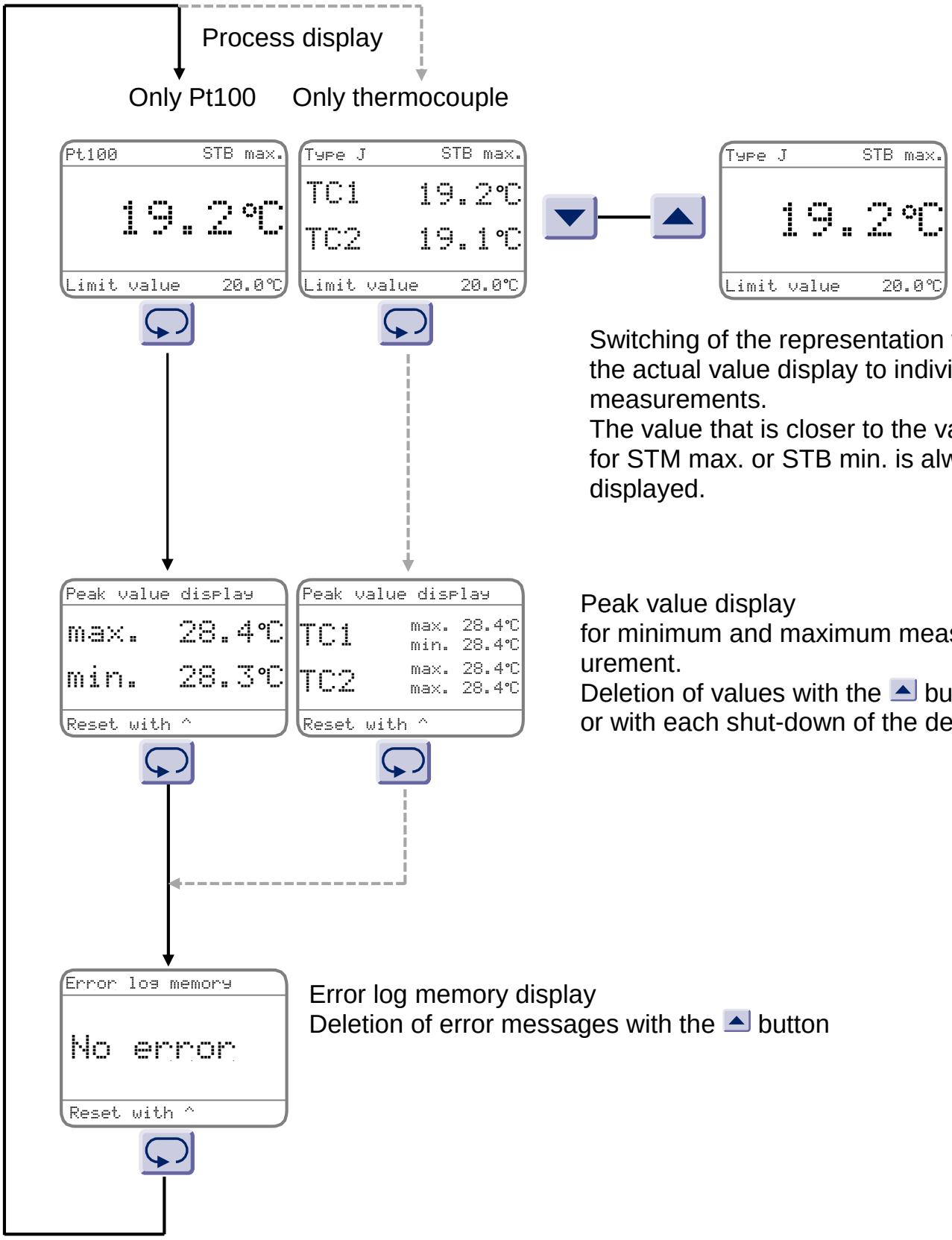

Switching of the representation for the actual value display to individual measurements.
The value that is closer to the value for STM max. or STB min. is always displayed.

Peak value display
for minimum and maximum measurement.
Deletion of values with the button or with each shut-down of the device.

Error log memory display
Deletion of error messages with the button

Note for the display

Parameter only appears with appropriate configuration

Parameter only appears with appropriate device version

3.4 Configuration level

Display **Description** (entered values are factory settings)

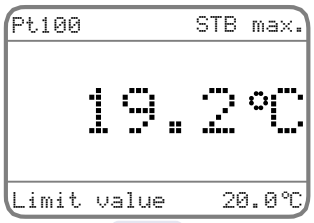

Working level

Actuate for 2s

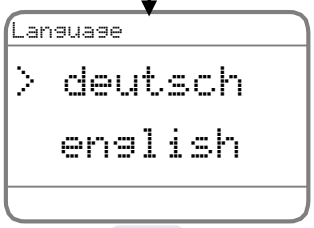

Language of user guidance
deutsch
english
française

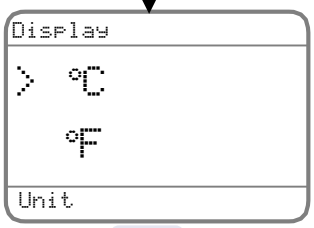

Unit of measure of the display
°C
°F

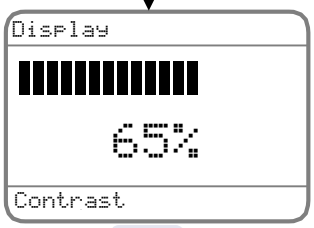

Contrast of the display
Change of the value within the range 5 ... 100%

Display **Description** (entered values are factory settings)

Entry of the password for the security level (0010 in condition as delivered)

ⓘ After an incorrect password has been entered three times, the device enters a safety timeout for 60 minutes. With the setting 0000 and active password protection, a jump to the working level takes place.

Security area

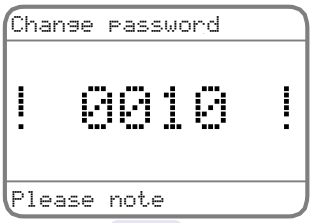

Change the password
Change the value within the range 0000 ... 9999

ⓘ Attention:
Write down the password. Resetting to 0010 can only take place in the factory

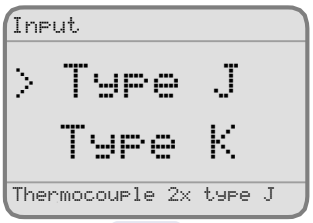

Input

Type J	Double thermocouple Fe-CuNi
Type K	Double thermocouple NiCr-Ni
Type N	Double thermocouple NiCrSi-NiSi
Type S	Double thermocouple Pt10Rh-Pt

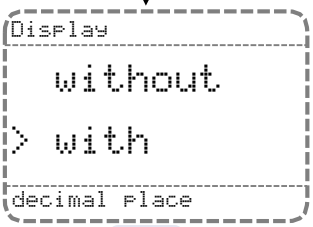

Decimal place (only for Pt100 input and double thermocouple type J)

without	no decimal place
with	one decimal place

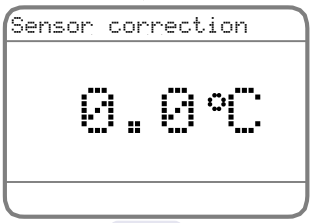

Measurement correction
Change of the value in the range -10°C (-10.0°C) ... 10°C (10.0°C)

Display

Description (entered values are factory settings)

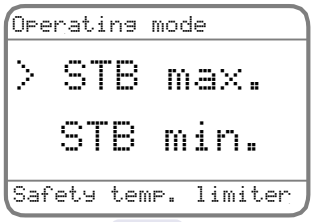

Note: Select operating mode STB for ASTB

Display	**Operating mode**	**Alarm function**
STB max.	Safety	max
STB min.	Temperature limiter;	min
STW max.	Safety	max
STW min.	temperature monitor;	min

Description:
max: Relay is deactivated when the adjusted limit value is exceeded
min: Relay is deactivated when the adjusted limit value is undercut

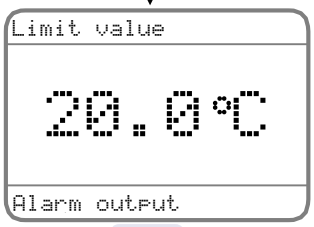

Limit value (switching point) alarm output
Change of the value in the corresponding measuring range.

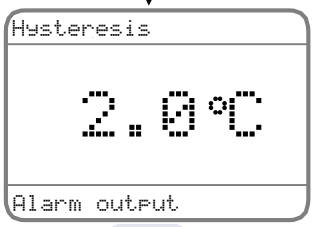

Alarm output hysteresis
Change of the value in the range *1°C (0.1°C) ... 100°C (100.0°C).*

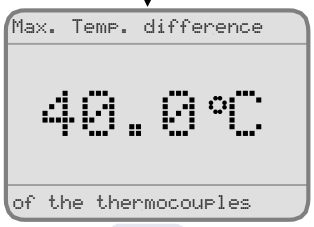

Measurement difference of thermocouples
Change of the value in the range *1 °C (1.0°C) ... 5%* of final value of the programmed thermocouple.

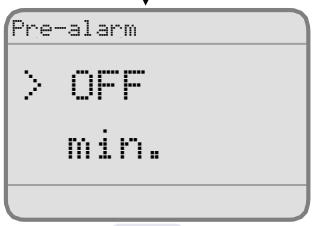

Function of the pre-alarm relay
OFF Pre-alarm relay is not used, relay tripped
min. Pre-alarm relay is energised if the alarm value is undercut
max. Pre-alarm relay is energised if the alarm value is exceeded

Display **Description** (entered values are factory settings)

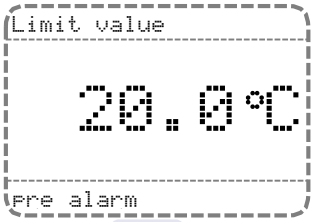

Alarm value (switching point) of the pre-alarm relay
Change of the value in the corresponding measuring range.

Pre-alarm relay hysteresis
Change of the value in the range *1°C (0.1°C) ... 100°C (100.0°C).*

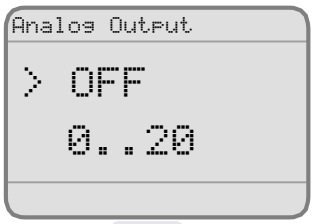

Function of the analog output

OFF	Analog output is switched off
0..20	Analog output 0-20mA and/or 0-10V
4..20	Analog output 4-20mA and/or 2-10V
0..20/22	Analog output 0-20mA and/or 0-10V, in case of error 22mA/11V
4..20/22	Analog output 4-20mA and/or 2-10V, in case of error 22mA/11V
3.6/4..20	Analog output 4-20mA and/or 2-10V, in case of error 3.6mA/1.8V

Start value of the analog output
Change of the value in the range *-200°C (-200.0°C) ... 2000°C (2000.0°C).*

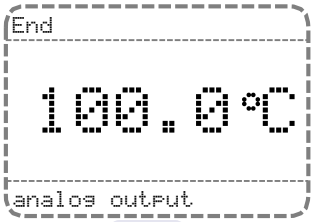

End value of the analog output
Change of the value in the range *200°C (-2000.0°C) ... 2000°C (2000.0°C).*

Display	**Description** (entered values are factory settings)
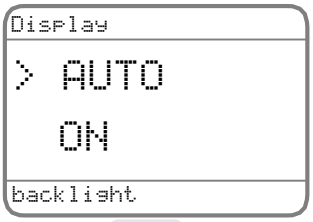	Background lighting of the display *AUTO* Lighting only goes out after ***only*** 2 min. if a button is not pressed. In case of an error and if the relay is switches off, the lighting switches on and remains active. *ON* The lighting is permanently active.
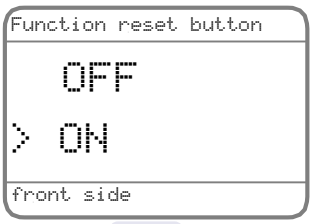	Front-side function reset button *OFF* Button disabled *ON* Button active
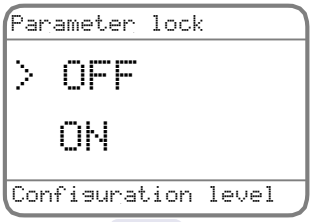	Parameter lock for the configuration level *OFF* No parameter lock *ON* Parameter locked
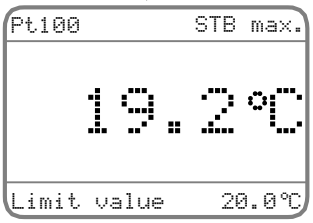	Return to the working level

3.5 Error messages

Display	Description
Caution! Suppl. Voltage too low! Please check	The supply voltage does not reach the value that is required for the device to function safely.
Caution! Parameter locked activated	The parameter cannot be changed, because the parameter lock is activated for the configuration level.
Caution! Incorrect password 1. failed attempt	An incorrect password was entered for the security area. The display returns to password entry after 3 seconds.
Sequence 49min 30s Safety time	After an incorrect password has been entered three times, the device enters a safety timeout for 60 minutes.
Thermocouples Broken line Please check	A cable interruption is detected at the connection terminals to the thermocouples. Check connection of the thermocouples.
Thermocouples Measured val. > XXX°C Please check	The measurement exceeds the maximum temperature for the selected thermocouple.
Thermocouples Measured val. < XXX°C Please check	The measurement undercuts the minimum temperature for the thermocouple.
Pt100 Short circuit Please check	A short circuit was detected at the terminals of the Pt100. Check connection lines and Pt100 probes.

Error messages

Display	Description
Pt100 Broken line Please check	A cable interruption was detect at the terminals of the Pt100. Check connection lines and Pt100 probes.
Pt100 Measured val. > 650°C Please check	The measurement exceeds the maximum temperature for Pt100 probes.
Pt100 Measured val. < -120°C Please check	The measurement undercuts the minimum temperature for Pt100 probes.
Internal error Device temperature Please check	The internal temperature of the device has detected an impermissibly high or low value. Check the installation conditions and environmental temperature of the device.
Fatal error Memory error Replace device	Monitoring of the program- and/or working memory revealed an error. The device must be inspected in the factory.
Fatal error Hardware error Replace device	A deviation was detected for an internal voltage. The device must be inspected in the factory.
Fatal error Relay fault Replace device	An incorrect setting of the relay contact was detected. The device must be inspected in the factory.

3.6 Functional safety

The STL50 safety temperature limiter was developed according to the specifications of the IEC 61508. This standard describes the functional safety of safety-related programmable electrical and electronic systems.

The devices is a Class B subsystem with the SIL2 requirement (single-channel). The safety function of the device relates to the detection and evaluation of the temperature and the resulting mandatory contact position of the installed relay.

Safe state

The safe state of the device is only provided when the relay is in idle position (closed current principle). If the internal diagnostic system recognises an error, the relay switches to idle position. Therefore, a normally-open contact can be used for integration of the relay changeover into the monitoring device.

Temperature probe

Connected temperature probes are monitored for cable breaks or short-circuits. With thermocouples, this is only physically possible for double thermocouples. It is not permissible to use simple thermocouples and connect the inputs in parallel with jumpers. If separate probe fittings are used, they must be installed next to each other so that they both detect the same temperature.

In case of faults and errors

If a fault occurs in the system, the cause must be rectified immediately. If the STL50 safety temperature limiter is decommissioned for this purpose, the process must be safeguarded in another manner. If there is a device error, we request that you send the device to the factory with a brief description of the error.

STL50 safety indicators for functional safety			
Safety-related output signal		Relay output	
Test standard		IEC 61508	
Inspection authority		TÜV NORD CERT GmbH	
SIL		2	
System		Type B	
		Input	
		Pt100	Thermocouple
λ_{SD}	(rate of detected harmless failures)	1740 FIT	1740 FIT
λ_{SU}	(rate of undetected harmless failures)	601 FIT	542 FIT
λ_{DD}	(rate of detected dangerous failures)	741 FIT	742 FIT
λ_{DU}	(rate of undetected dangerous failures)	127 FIT	105 FIT
		(1 FIT = 1 failure / 10^9 h)	
Number of harmless failures (SFF)		96 %	97 %
Average probability of failure (PFD_{avg})		3.80×10^{-3}	2.80×10^{-3}
Probability of failure per hour (PFH)		1.27×10^{-7}	1.05×10^{-7}
Duration of use of safety function		10 Years	

3.7 Functional test

With operation of the device at a higher demand rate, e.g. with process-related frequent activation of the device, additional functional testing can be omitted in accordance with IEC 61508. This also applies for operation with a low requirement rate, i.e. infrequent activation of the device due to process conditions. The probability of failure is very low for a service life of 10 years according to SIL2 (see table on page 19).
The temperature probe is replicated with a simulator for a functional test. The inputs can be connected in parallel for thermocouples.

The test begins with a check of the temperature monitoring. The relay must be active in the good range. Then a check

- takes place to determine whether the temperature on the display of the STL50 matches the temperature of the simulator for each test step
- the alarm function when the good temperature range is violated
- the alarm function in case of a probe break (each cable separately) and probe short-circuit.

Correct alarm function of the STL50 is provided if

- the relay is deactivated and the contact switches to rest position,
- the error is shown correctly in plain text on the display,
- the LED alarm on the front of the STL50 illuminates,
- a voltage of 24 V DC is connected to the appropriate terminals for an external alarm.

After the simulator changes the temperature back to the good range, the STL50 functions correctly if the relay is reactivated, in safety temperature limiter operating mode,

- the relay is not activated until the front RESET button or an external RESET button having been pressed,
- then the display shows the normal operating data,
- the LED alarm on the front of the STL50 goes out,
- and voltage is no longer connected to the terminals of the external alarm.

In safety temperature limiter operating mode,

- the relay is activated without the front RESET button or an external RESET button having been pressed,
- the display shows the normal operating data,
- the LED alarm on the front of the STL50 goes out;
- and voltage is no longer connected to terminals 17 and 18.

DANGER

Attention!

If the relay is not deactivated during one of the test steps or temperature and/or causes of error are not displayed correctly, the STL50 must be sent to the factory for inspection. In the meantime, the system must be kept in a safe state by other means.

Special notices!

- The STL50 safety temperature limiter must be installed in a switch cabinet with a protection rating of at least IP40.
- Strain relief for the connecting cable(s) of the temperature sensor must be provided.
- As protection for the internal device fuse of the STL50, securing the monitoring current circuit with an external fuse (maximum 1.6 A, medium time lag) is recommended. If the internal fuse is tripped, the device must be sent to the factory for service!

3.8 Approved temperature probes

Pt100	Safety temperature probe TR293; TR296
Thermocouple	Safety temperature probe TC293; TC293

T(R,C)293

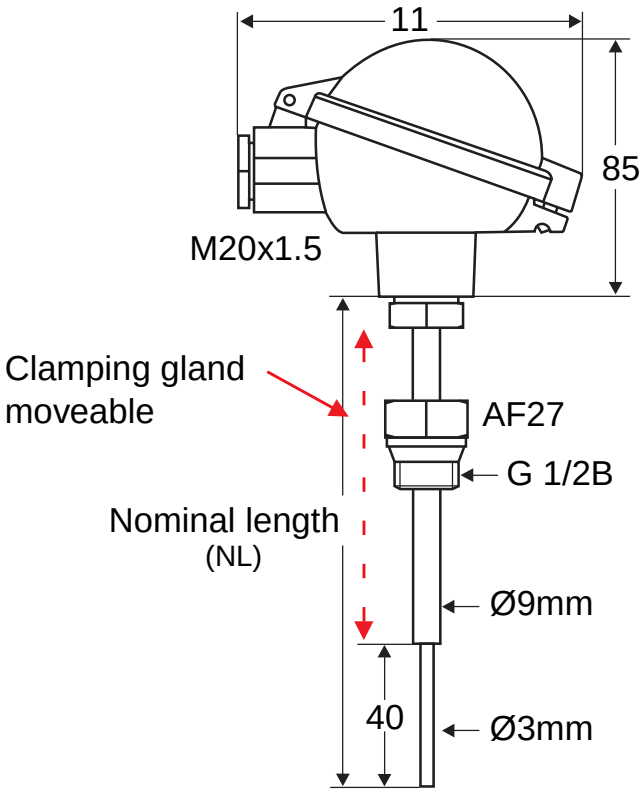

T(R,C)296

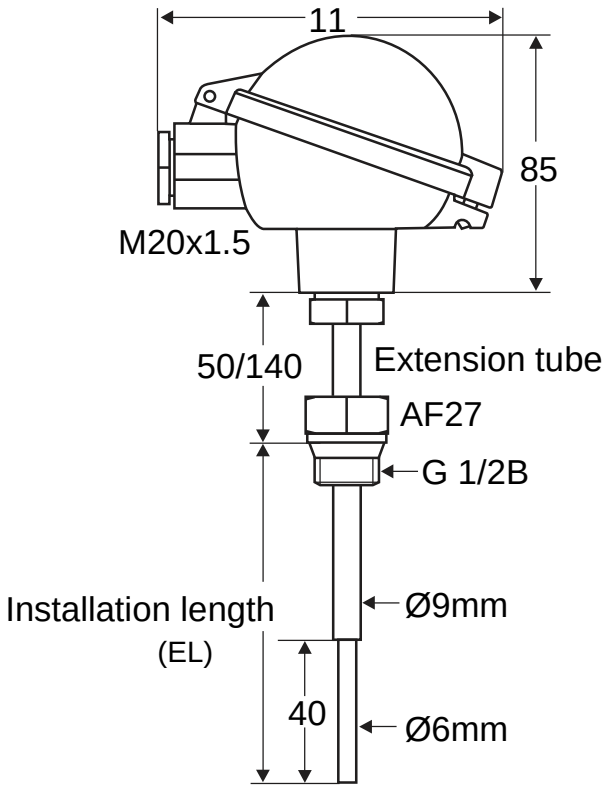

4 Technical data

Auxiliary energy	
Supply voltage	230 V AC ±10%, 115 V AC ±10%, 24 V AC ±15%, or 24 V DC ±15 %
Power consumption	< 4 VA
Rated voltage	250V AC according to EN60664-1, between input / relay output / supply voltage Degree of contamination 2, overvoltage category III
Test voltage	4kV= between input/relay output/supply voltage
CE Conformity	EN 61326-1: 2013 EN 61326-2-2: 2013
Environmental Conditions	
Environmental temperature	-10..+55 °C
Transport and storage conditions	-30..+60 °C
Relative air humidity	< 95%
Condensation	not permitted
Vibrations	Use in low-vibration environments only!
Approval for	
EN 14597: 2015	Temperature control devices and temperature limiters for heat generating systems
EN 61508:2011 SIL2	Functional safety of electrical/electronic/programmable electronic safety-related systems
Input	
Pt100	in the range -100.0 ... 600.0 °C or -100 ... 600 °C 3-wire connection, maximum resistance 4 Ω per wire Probe current <1 mA (no independent heating)
Thermocouple	
Type J	Fe-CuNi range -100.0 ... 800.0 °C or -100 ... 800 °C
Type K	NiCr-Ni range -150 ... 1200 °C
Type N	NiCrSi-NiSi range -150 ... 1200 °C
Type S	Pt10Rh-Pt range 0 ... 1600 °C
	Integrated comparison point compensation
Basic accuracy	±0.5 %, ±2 digits
Temperature coefficient	0.01 %/K
Display	Graphic LCD with 128 x 64 pixels with white backlighting
Outputs	
Main relay (safety-related)	Changeover contact <250 V AC <200 VA <2 A cosν ≥0,7; <250 VDC <80 W <2 A, internally safeguarded with 2 A slow-burning fuse
Pre-alarm relay	Changeover contact <250 V AC <500 VA <2 A ohmic load; <30 VDC <60 W <2 A,
Analog output	0/4 … 20mA burden ≤500Ω; 0/2 … 10V burden > 500Ω, galvanically isolated, Output switches automatically (load-dependent)
Accuracy (analog output)	0.4% TK: 0.01%/K
Housing	
Material	Polyamide (PA) 6.6, UL94V-0 Carrier rail mounting TS35, DIN EN 60715
Weight	approx. 450g
Electrical connection	Screw terminals 0.14 ... 2.5 mm² (AWG 26 .. 14)
Protection type	IP20, DIN EN 60529, BGV A3

4.1 Ordering code

	1.		2.		3.		4.
STL50-	☐	-	☐	-	☐	-	☐

1.		
	1	Pt100, 3-wire connection -100,0 ... 600.0 °C/-100 ... 600 °C
	5	Thermocouples J (Fe-CuNi) -100.0 ... 800.0 °C/-100 ... 800 °C K (NiCr-Ni) -150 ... 1200 °C N (NiCrSi-NiSi) -150 ... 1200 °C S (Pt10Rh-Pt) 0 ... 1600 °C
2.		
	1R	1 Alarm output relay
	2RAO	2 relay outputs + analog output
3.		
	0	230 V AC ±10 % 50-60 Hz
	1	115 V AC ±10 % 50-60 Hz
	4	24 V AC ±15 % 50-60 Hz
	5	24 V DC ±15 %
4.		
	00	No options

5 Device transport and storage

Gentle and tension-free packaging of the housing must be ensured for transport (no machine wrapping of the package).
The device must be stored in the environmental conditions specified in the technical data.

6 Return to manufacturer

The legal regulations for environmental protection and our personnel require that devices which are sent back which have come into contact with liquid are handled without risk to people or the environment.
If you send a device back to us for inspection or repair, we must request that you strictly observe the following requirements:

On the GHM homepage under: 'Downloads/forms' a return shipment form can be downloaded.

The repair can be performed quickly and without call-back questions if:

1. a filled-in form is provided for each device,
2. the device has been cleaned and packaging which prevents damage to the device is used, and
3. a safety data sheet for the measuring medium is affixed to the outside of the package, if the device has come into contact with a critical substance.

7 Disposal

Separation by material and recycling of device components and packaging must take place when the device is disposed of. The valid legal regulations and directives applicable at the time must be observed. The device may not be disposed of with household waste. If the device should be disposed of, return it to us with the return shipment form filled in under section 6 Return to manufacturer. We will then arrange for the proper disposal.

8 Imprint

GHM GROUP - Martens
GHM Messtechnik GmbH | Kiebitzhörn 18 | 22885 Barsbüttel
Managing Director:
Dipl.-Ing. (FH) of Process and Environmental Technology Johannes Overhues
Registered office: Schloßstr. 6,
88453 Erolzheim / Germany

Ulm District Court, Commercial Register Section B 730462

9 Declaration of Conformity

Martens
Member of GHM GROUP

CE

EU-KONFORMITÄTSERKLÄRUNG
EU-DECLARATION OF CONFORMITY

GHM GROUP - Martens | GHM Messtechnik GmbH | Kiebitzhörn 18 | 22885 Barsbüttel | GERMANY

Dokument-Nr. / Monat.Jahr:
Document-No. / Month.Year: **3033 / 11.2017**

Wir erklären hiermit als Hersteller in alleiniger Verantwortung, dass die folgenden Produkte konform sind mit den Schutzzielen der Richtlinie des Europäischen Parlaments:
We declare as manufacturer herewith under our sole responsibility that the following products are in compliance with the protection requirements defined in the European Council directives:

Produktbezeichnung:
Product identifier: **STL50**

Produktbeschreibung:
Product description: **Sicherheits-Temperaturbegrenzer**
Safety Temperature Limiter

Die Produkte entsprechen den folgenden Europäischen Richtlinien:
The products conforms to following European Directives:

Richtlinien / *Directives*	
2014/30/EU	EMV Richtlinie / *EMC Directive*
2014/35/EU	Niederspannungsrichtlinie / *Low Voltage Directive*
2011/65/EU	RoHS / *RoHS*

Angewandte harmonisierte Normen oder angeführte technische Normen:
Applied harmonized standards or mentioned technical specifications:

Harmonisierte Normen / *harmonized standards*	
EN 61326-1:2013	Allgemeine EMV-Anforderungen / *General EMC requirements*
EN 61326-2-2:2013	Besondere EMV-Anforderungen / *Particular EMC requirements*
EN 60664-1:2007	Allgemeine Isolationsanforderungen / *General isolating requirements*
EN 50581:2012	Beschränkung der gefährlichen Stoffe / *Restriction of hazardous substances*

Diese Erklärung wird verantwortlich für den Hersteller abgegeben durch:
The manufacturer is responsible for the declaration released by:

Michael Wulf

Standortleiter
Site director

Barsbüttel, 08. November 2017

Diese Erklärung bescheinigt die Übereinstimmung mit den genannten Harmonisierungs-rechtsvorschriften, beinhaltet jedoch keine Zusicherung von Eigenschaften.
This declaration certifies the agreement with the harmonization legislation mentioned, contained however no warranty of characteristics.

Members of GHM GROUP: GREISINGER | HONSBERG | Martens | IMTRON | DeltaOHM

10 Notes

Parameters	Factory setting	User setting
Language	deutsch	
Display unit	°C	
Contrast display	65%	
Password	0010	
Input		
Decimal place	One	
Sensor correction	0.0°C	
Operating mode	STB_{max}	
Limit value Alarm output	20°C	
Hysteresis Alarm output	2°C	
Max. Temperature difference of the thermocouples	40°C	
Pre-alarm function	OFF	
Pre-alarm value	20°C	
Pre-alarm hysteresis	2°C	
Analog output function	OFF	
Analog output start value	0°C	
Analog output end value	100°C	
Backlight Display	AUTO	
Function reset button front side	ON	
Parameter lock for configuration level	OFF	